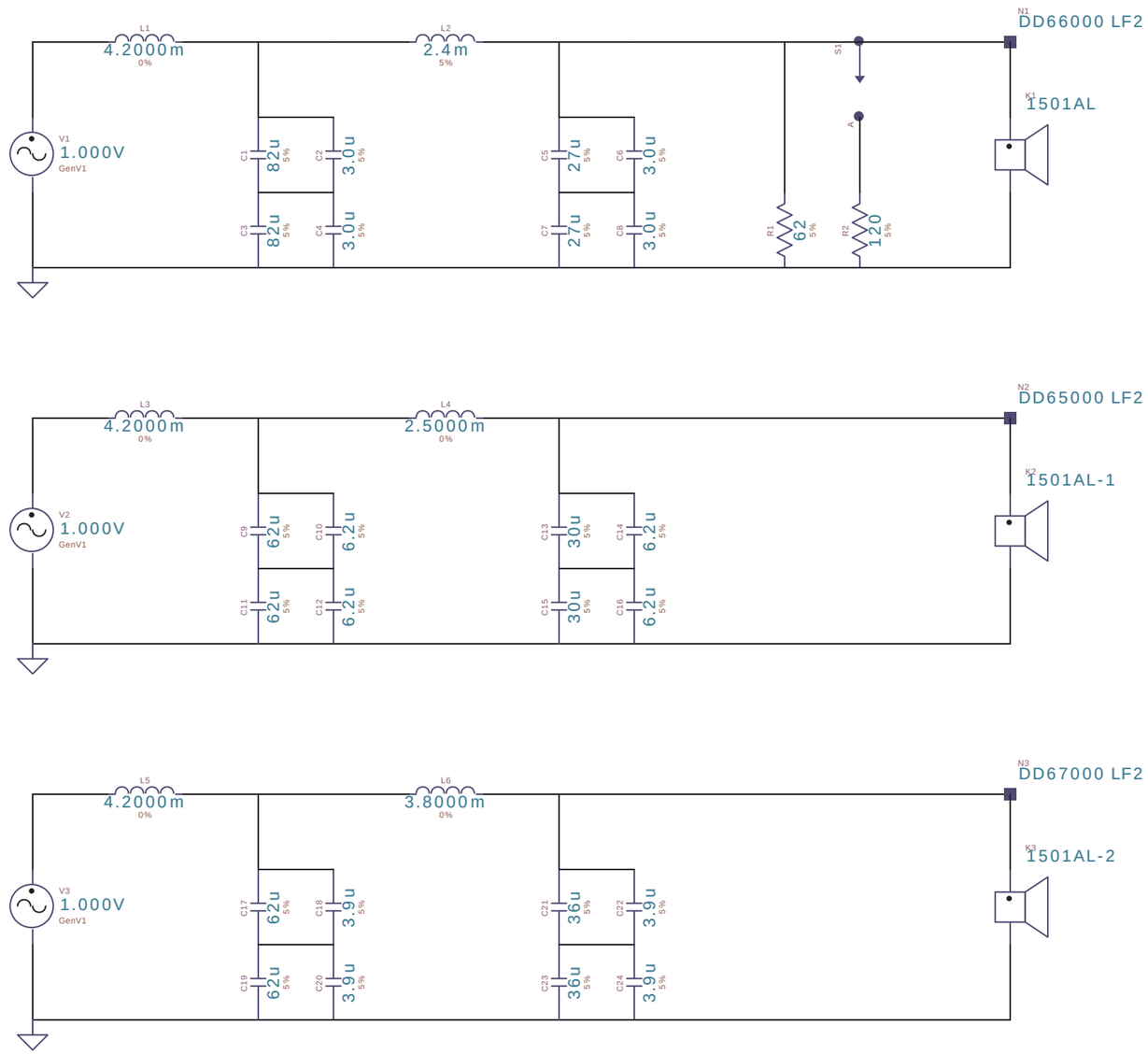

Notes

LEAP 5.2.0.351 Jan/18/2008 Crossover Shop	Person: Company:	Project: File: E2LF2~1.LCD	Sep 19, 2012 Wed 4:58 pm	LINEAR SYSTEMS